EV Series Cylinder

Clamp Modules Cylinder

Characteristic:

EV series without piston rod, with diaphragm and a significantly shorter stroke,clamps workpiece quickly for surface roughness, suitable for all types of attaching & detaching tools. Flat structure and stronge clamp force,especially for slender workpiece.Only work with close fitting the workpiece and with reset function for high speed movement,due to no cushioning.

Specification:

Type	EV-20/75-5 EV-20/120-5
Fluid	Compressed Air
Structure Feature	Diaphragm Cylinder
Operating pressure range (MPa)	0.5
Ambient temperature (℃)	-20 ~ 40

Mounting type:

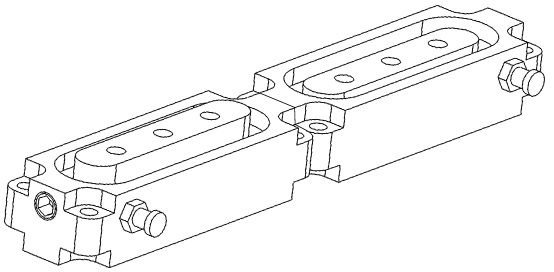

Accessories Mounting type:

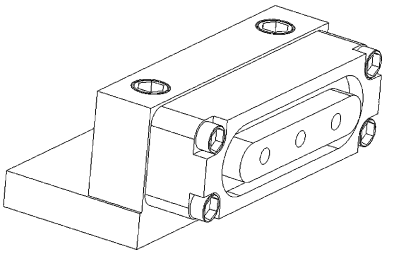

Dimension:

■ EV-20/75-5

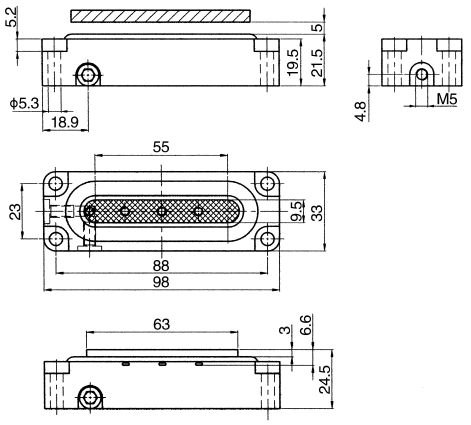
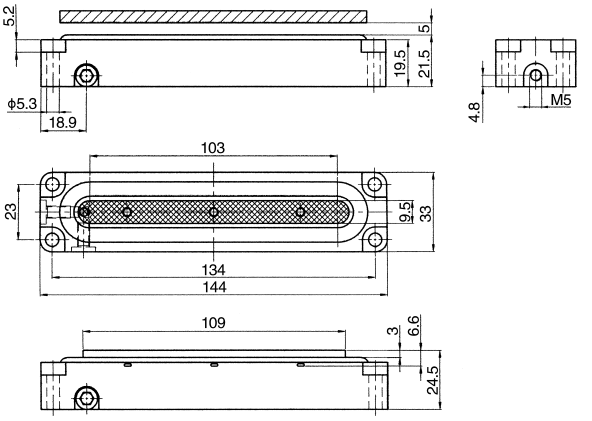
■ EV-20/120-5